竑碩科技股份有限公司

Hyper-Sense Technology

TEL:886-7-5535637 FAX:886-7-5537860

http://www.hyper-sense.com.tw

- **Application:**
- **for electric heating cooking appliances such as electric stove, oven, BBQ grill, deep fryer and other electric housewares . . . .etc.**

- **Approval:**
- **UL / CUL----------E75072**
- **120VAC 15A for 6,000cycles.**

- **Function: Single pole the contact opens when the temperature is reached.**

- **Maximum temperature: 250℃**

- **Temperature Setting Range: 0~250℃**

- **Tolerance of Operation Range: ±5%℃**
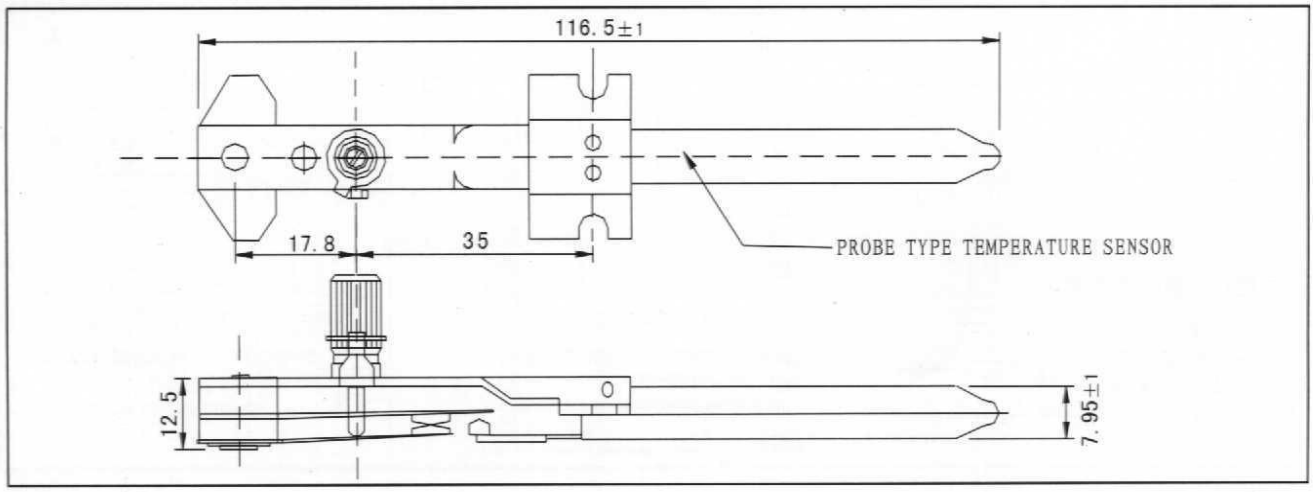
Probe Type Thermostat MODEL: PC-1